REVISIONS			
REV.	DESCRIPTION	DATE	APPROVED

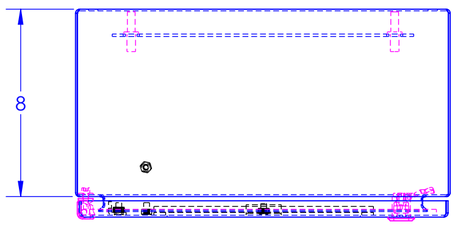

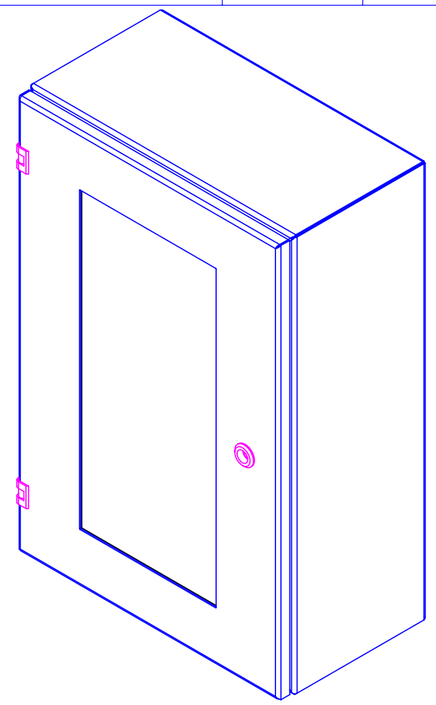

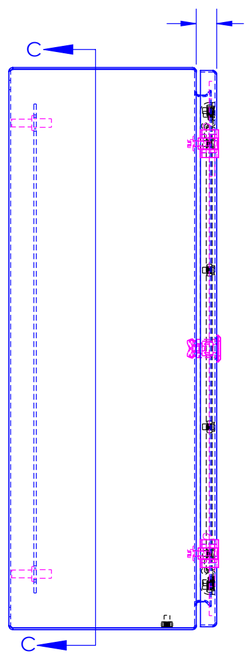

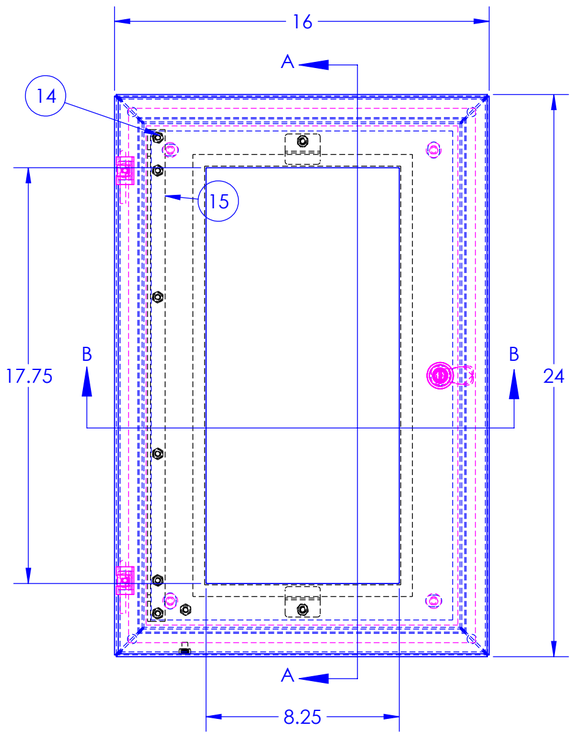

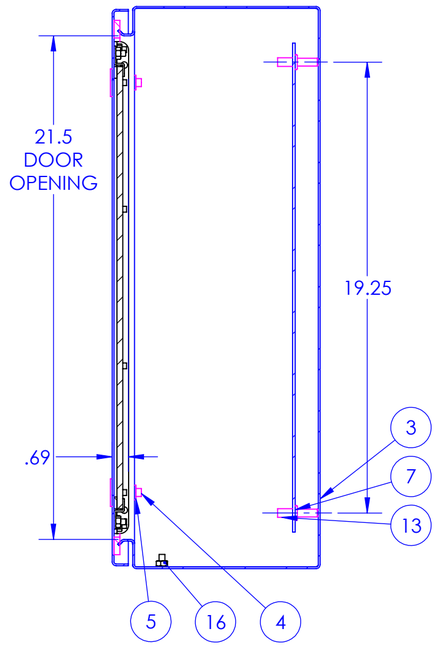

SECTION A-A

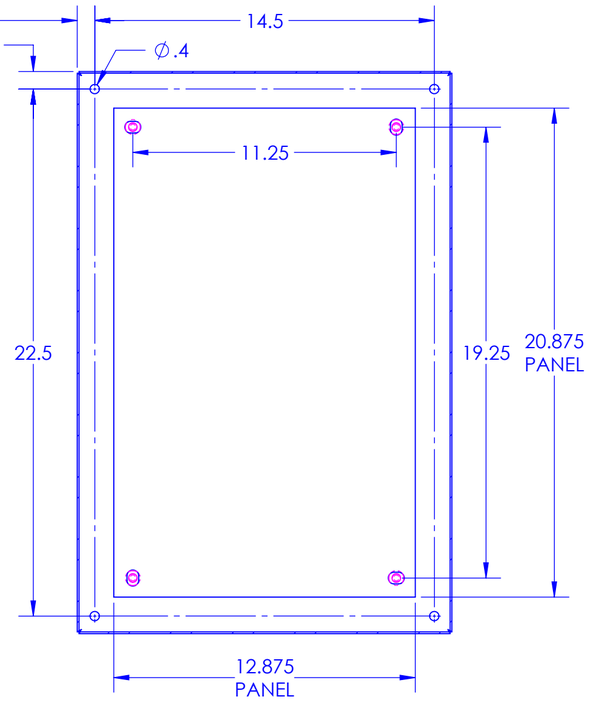

SECTION C-C

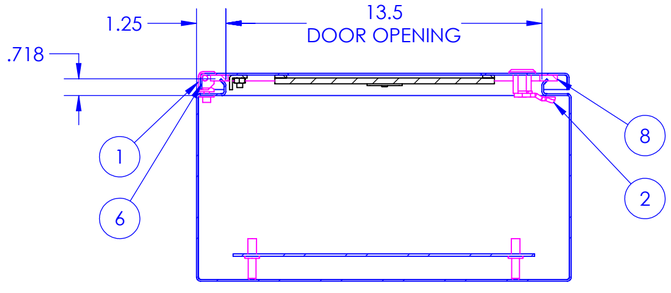

SECTION B-B

PROPRIETARY AND CONFIDENTIAL		NAME	DATE
THE INFORMATION CONTAINED IN THIS DRAWING IS THE SOLE PROPERTY OF RALSTON METAL PRODUCTS. ANY REPRODUCTION IN PART OR AS A WHOLE WITHOUT THE WRITTEN PERMISSION OF RALSTON METAL PRODUCTS IS PROHIBITED.	DRAWN BY	DAVE BURNS	2023-03-02
	ISSUED BY	DAVE BURNS	2023-03-02
UNLESS OTHERWISE SPECIFIED	JOB ORDER NO:		
DIMENSIONS ARE IN INCHES TOLERANCES: FRACTIONAL ±1/32" ANGULAR: MACH ±1° BEND ±1/32" ONE PLACE DECIMAL ±0.1" TWO PLACE DECIMAL ±0.01" THREE PLACE DECIMAL ±0.005"	CUSTOMER DRAWING NO:		
MATERIAL: SEE BOM	[AUTHORIZED SIGNATURE IN RED]		
FINISH: SEE BOM			
DO NOT SCALE DRAWING	THIRD ANGLE PROJECTION		

Ralston Metal Products Limited
50 WATSON ROAD
GUELPH, ONTARIO N1L 1E2
PHONE: (519) 838-2988
TOLL FREE: 1-800-265-7611
FAX: (519) 836-9763
WWW.RALSTONMETAL.COM

CUSTOMER: RALSTON STOCK

SHOP DRAWING NUMBER:

SIZE	PART NAME:	REV.
C	V-SW-241608	

PART NO.	V-SW-241608	
SCALE: 1:5	WEIGHT: 42.156	SHEET 1 OF 1