REVISIONS			
REV.	DESCRIPTION	DATE	APPROVED

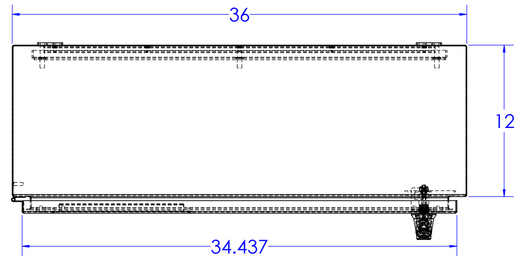

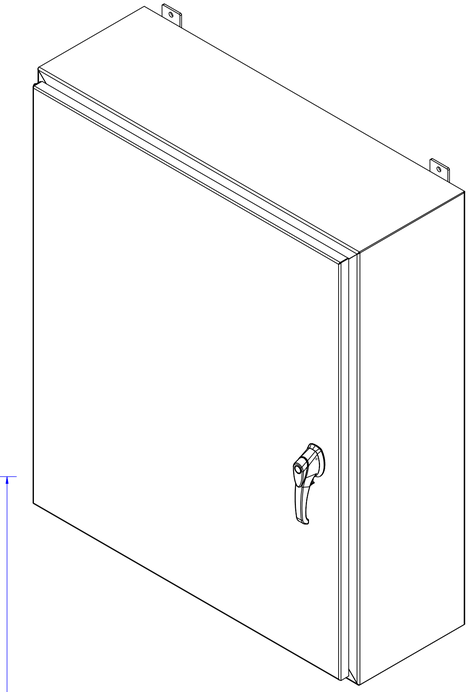

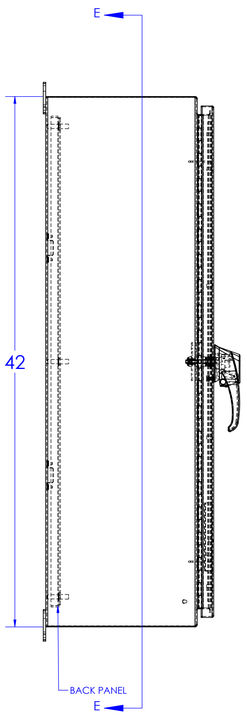

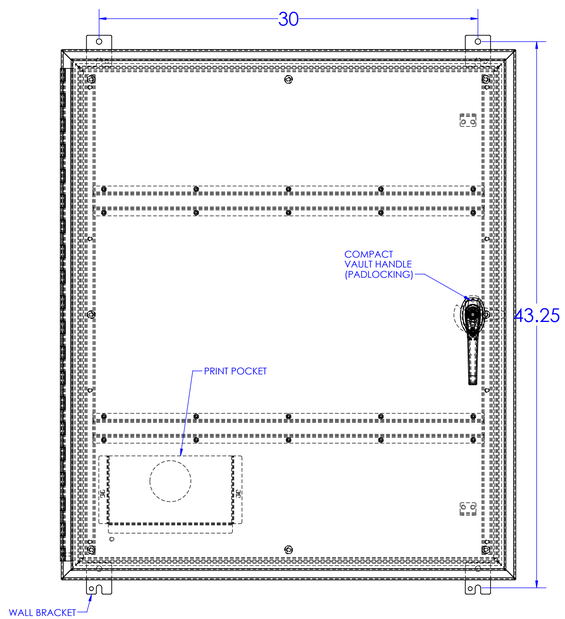

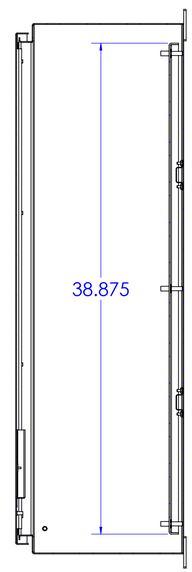

SECTION C-C

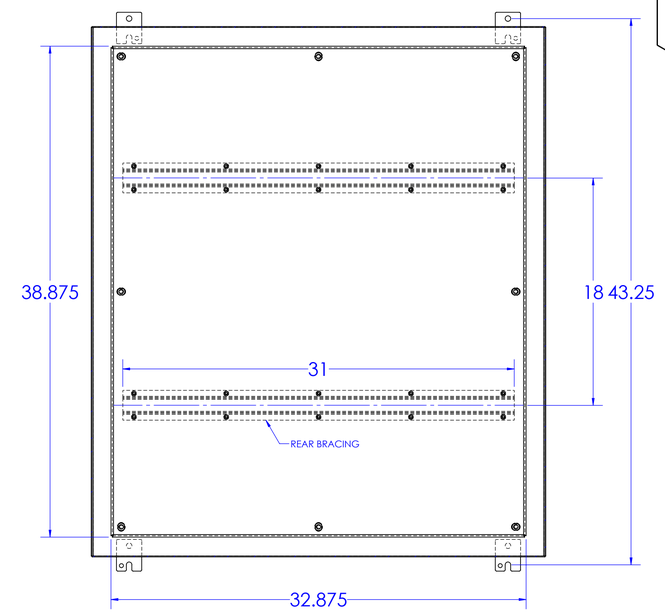

SECTION E-E

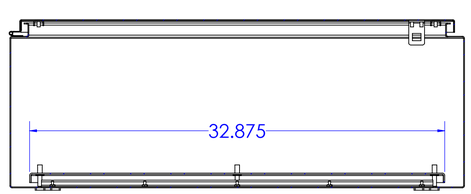

SECTION D-D

PROPRIETARY AND CONFIDENTIAL

THE INFORMATION CONTAINED IN THIS DRAWING IS THE SOLE PROPERTY OF RALSTON METAL PRODUCTS. ANY REPRODUCTION IN PART OR AS A WHOLE WITHOUT THE WRITTEN PERMISSION OF RALSTON METAL PRODUCTS IS PROHIBITED.

UNLESS OTHERWISE SPECIFIED

DIMENSIONS ARE IN INCHES
TOLERANCES:
FRACTIONAL ±1/32"
ANGULAR: MACH ±1° BEND ±1/2°
TWO PLACE DECIMAL ±0.1"
THREE PLACE DECIMAL ±0.005"
MATERIAL:
SEE BOM
FINISH:
SEE BOM

DO NOT SCALE DRAWING

	NAME	DATE
DRAWN BY	WAYNE SYNNOTT	2022-12-20
ISSUED BY	WAYNE SYNNOTT	2022-12-20

JOB ORDER NO:

CUSTOMER DRAWING NO:

(AUTHORIZED SIGNATURE IN RED)

THIRD ANGLE PROJECTION

Ralston Metal Products Limited
50 WATSON ROAD
GUELPH, ONTARIO N1L 1E2
PHONE: (519) 836-2980
TOLL FREE: 1-800-265-7611
FAX: (519) 836-9793
WWW.RALSTONMETAL.COM

CUSTOMER:
RALSTON STOCK
SHOP DRAWING NUMBER:

SIZE	PART NAME:	REV.
D	N43P-SS-423612	-

PART NO. N43P-SS-423612

SCALE: 1:6 | WEIGHT: 163.177 | SHEET 1 OF 1