REVISIONS			
REV.	DESCRIPTION	DATE	APPROVED

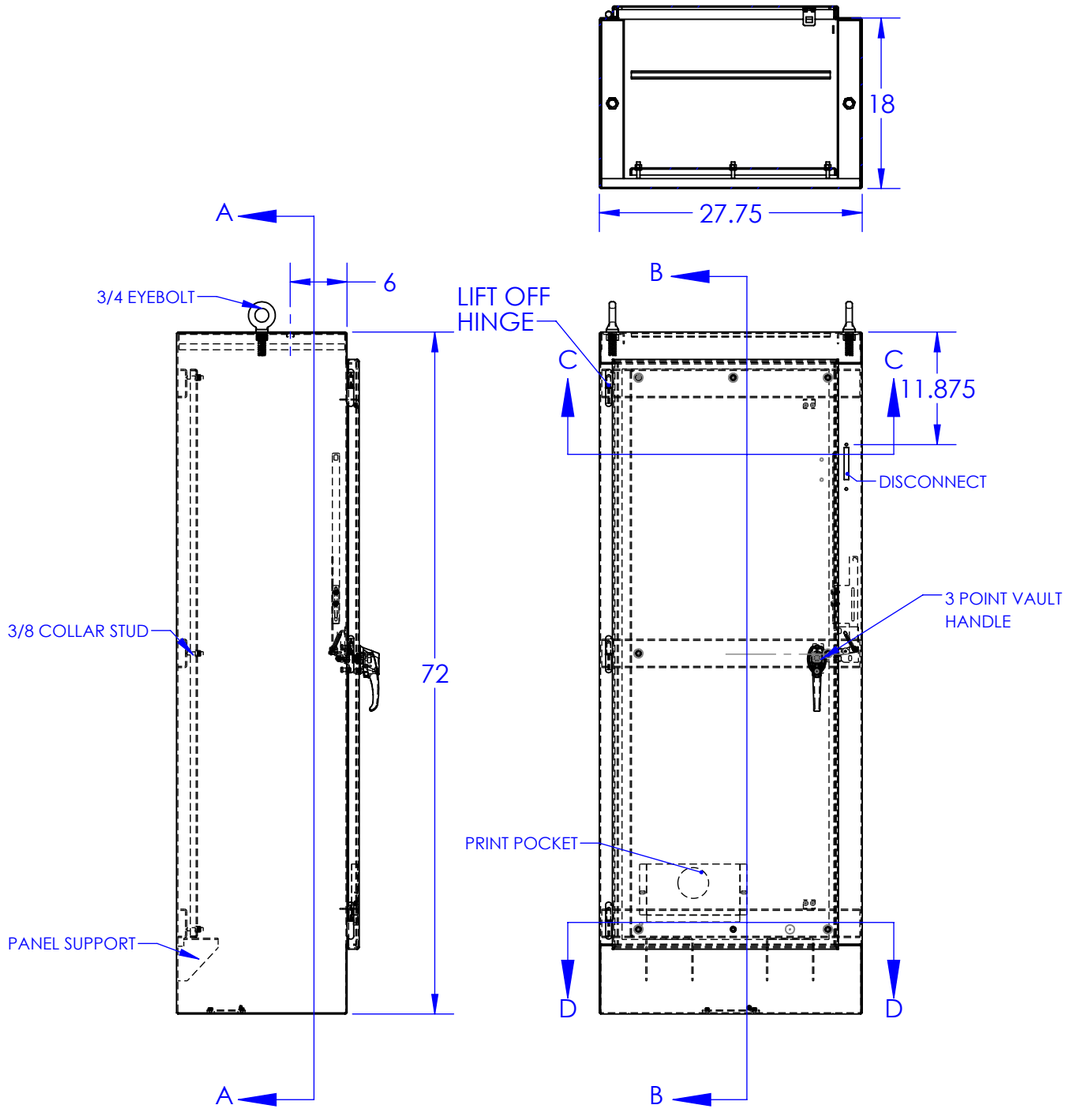

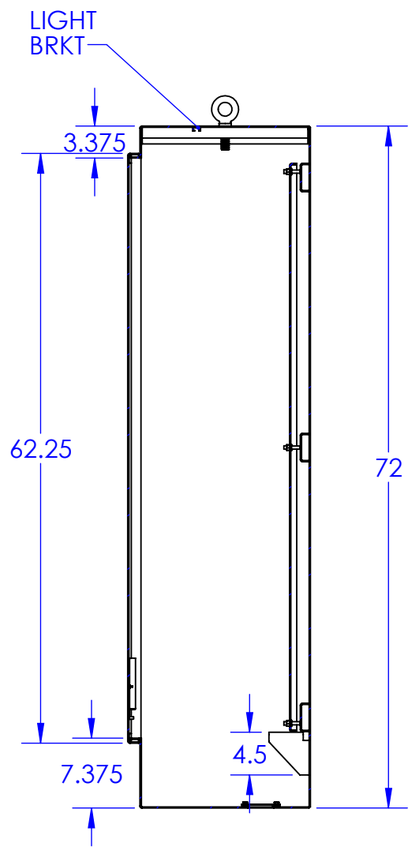

SECTION B-B

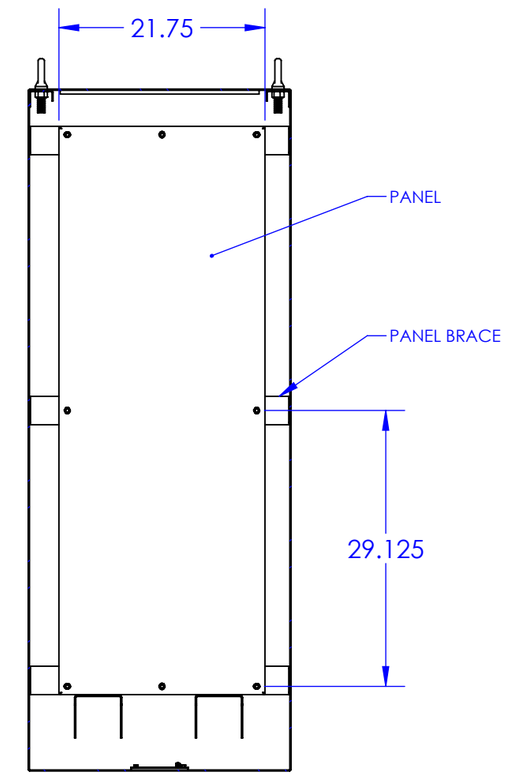

SECTION A-A

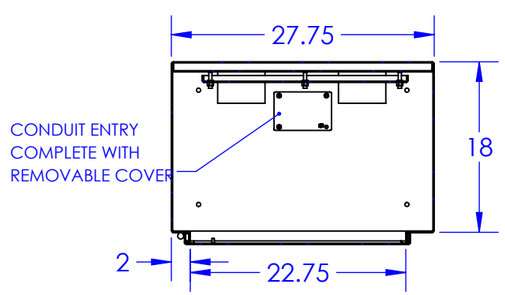

PROPRIETARY AND CONFIDENTIAL

THE INFORMATION CONTAINED IN THIS DRAWING IS THE SOLE PROPERTY OF RALSTON METAL PRODUCTS. ANY REPRODUCTION IN PART OR AS A WHOLE WITHOUT THE WRITTEN PERMISSION OF RALSTON METAL PRODUCTS IS PROHIBITED.

UNLESS OTHERWISE SPECIFIED

DIMENSIONS ARE IN INCHES
TOLERANCES:
FRACTIONAL ±1/32"
ANGULAR: MACH ±1° BEND ±1/32"
ONE PLACE DECIMAL ±0.1"
TWO PLACE DECIMAL ±0.01"
THREE PLACE DECIMAL ±0.005"

MATERIAL: SEE BOM

FINISH: SEE BOM

DO NOT SCALE DRAWING

	NAME	DATE
DRAWN BY	DAVE BURNS	3/6/2023
ISSUED BY	DAVE BURNS	3/6/2023

JOB ORDER NO:

CUSTOMER DRAWING NO:

(AUTHORIZED SIGNATURE IN RED)

THIRD ANGLE PROJECTION

Ralston Metal Products Limited
50 Watson Road
Guelph, Ontario N1L 1E2
Phone: (519) 836-2968
Toll Free: 1-800-265-7611
Fax: (519) 836-9763
www.ralstonmetal.com

CUSTOMER: RALSTON STOCK

SHOP DRAWING NUMBER:

SIZE	PART NAME:	REV.
B	4000-1D-722818	

PART NO. 4-1D-722818

SCALE: 1:16 | WEIGHT: 360.974 | SHEET 1 OF 1